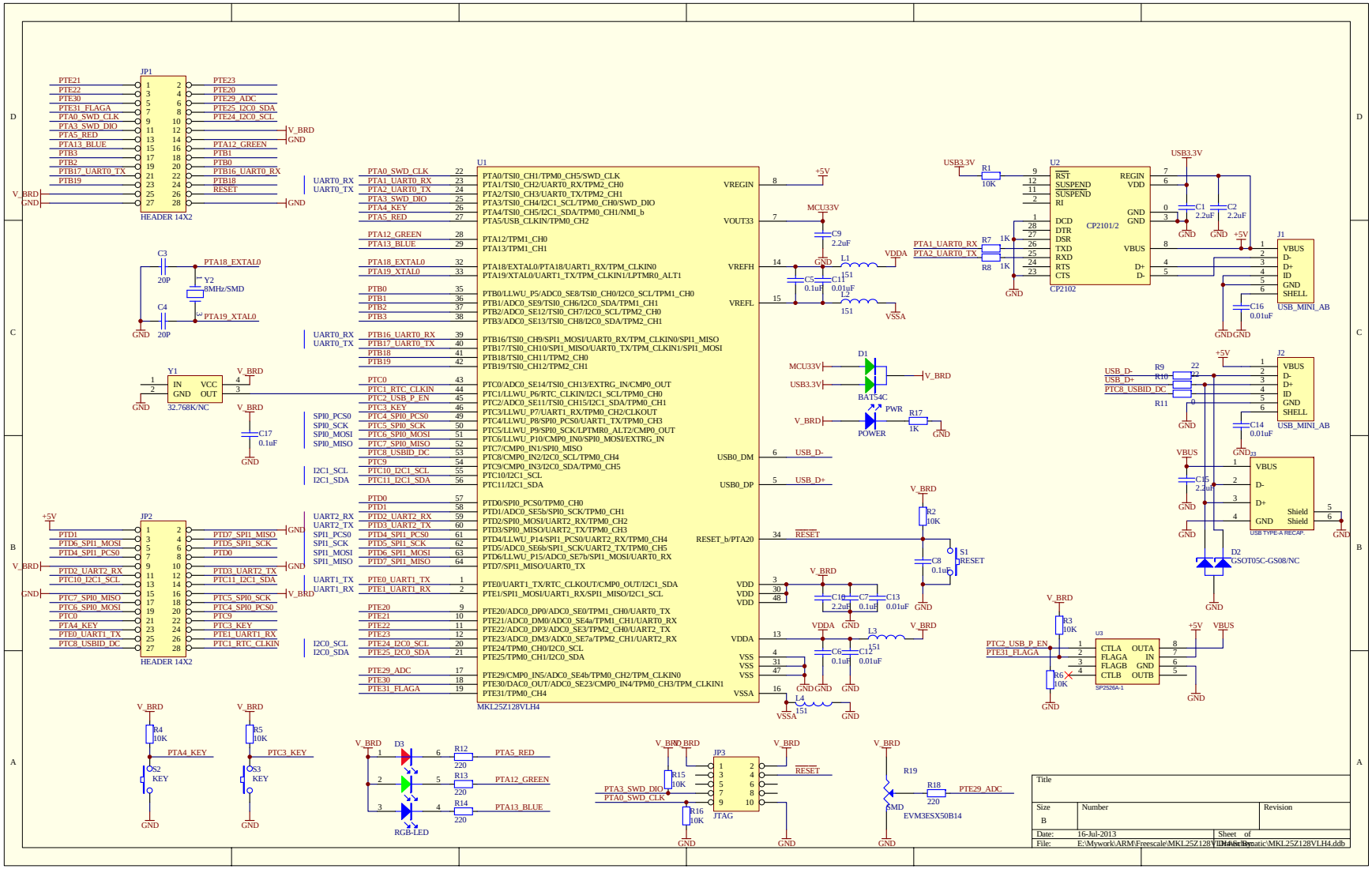
JP1
HEADER 14X2
PTE21
PTE22
PTE30
PTE31_FLAGA
PTA0_SWD_CLK
PTA3_SWD_DIO
PTA5_RED
PTA13_BLUE
PTB3
PTB2
PTB17_UART0_TX
PTB19
PTE23
PTE20
PTE29_ADC
PTE25_I2C0_SDA
PTE24_I2C0_SCL
PTA12_GREEN
PTB1
PTB0
PTB16_UART0_RX
PTB18
RESET
V_BRD
GND
C3
20P
C4
20P
Y2
8MHz/SMD
PTA18_EXTAL0
PTA19_XTAL0
Y1
32.768KC/NC
IN
GND
VCC
OUT
C17
0.1uF
JP2
HEADER 14X2
+5V
PTD1
PTD6_SPI1_MOSI
PTD4_SPI1_PCS0
PTD2_UART2_RX
PTC10_I2C1_SCL
PTC7_SPI0_MISO
PTC6_SPI0_MOSI
PTC0
PTA4_KEY
PTD0_UART1_TX
PTC8_USBID_DC
PTD7_SPI1_MISO
PTD5_SPI1_SCK
PTD0
PTD3_UART2_TX
PTC11_I2C1_SDA
PTC5_SPI0_SCK
PTC4_SPI0_PCS0
PTC9
PTC3_KEY
PTE1_UART1_RX
PTC1_RTC_CLKIN
U1
MKL25Z128VLH4
PTA0_SWD_CLK
PTA1_UART0_RX
PTA2_UART0_TX
PTA3_SWD_DIO
PTA4_KEY
PTA5_RED
PTA12_GREEN
PTA13_BLUE
PTA18_EXTAL0
PTA19_XTAL0
PTB0
PTB1
PTB2
PTB3
PTB16_UART0_RX
PTB17_UART0_TX
PTB18
PTB19
PTC0
PTC1_RTC_CLKIN
PTC2_USB_P_EN
PTC3_KEY
PTC4_SPI0_PCS0
PTC5_SPI0_SCK
PTC6_SPI0_MOSI
PTC7_SPI0_MISO
PTC8_USBID_DC
PTC9
PTC10_I2C1_SCL
PTC11_I2C1_SDA
PTD0
PTD1
PTD2_UART2_RX
PTD3_UART2_TX
PTD4_SPI1_PCS0
PTD5_SPI1_SCK
PTD6_SPI1_MOSI
PTD7_SPI1_MISO
PTE0_UART1_TX
PTE1_UART1_RX
PTE20
PTE21
PTE22
PTE23
PTE24_I2C0_SCL
PTE25_I2C0_SDA
PTE29_ADC
PTE30
PTE31_FLAGA
PTA0/TSI0_CH1/TPM0_CH5/SWD_CLK
PTA1/TSI0_CH2/UART0_RX/TPM2_CH0
PTA2/TSI0_CH3/UART0_TX/TPM2_CH1
PTA3/TSI0_CH4/I2C1_SCL/TPM0_CH0/SWD_DIO
PTA4/TSI0_CH5/I2C1_SDA/TPM0_CH1/NMI_b
PTA5/USB_CLKIN/TPM0_CH2
PTA12/TPM1_CH0
PTA13/TPM1_CH1
PTA18/EXTAL0/PTA18/UART1_RX/TPM_CLKIN0
PTA19/XTAL0/UART1_TX/TPM_CLKIN1/LPTMR0_ALT1
PTB0/LLWU_P5/ADC0_SE8/TSI0_CH0/I2C0_SCL/TPM1_CH0
PTB1/ADC0_SE9/TSI0_CH6/I2C0_SDA/TPM1_CH1
PTB2/ADC0_SE12/TSI0_CH7/I2C0_SCL/TPM2_CH0
PTB3/ADC0_SE13/TSI0_CH8/I2C0_SDA/TPM2_CH1
PTB16/TSI0_CH9/SPI1_MOSI/UART0_RX/TPM_CLKIN0/SPI1_MISO
PTB17/TSI0_CH10/SPI1_MISO/UART0_TX/TPM_CLKIN1/SPI1_MOSI
PTB18/TSI0_CH11/TPM2_CH0
PTB19/TSI0_CH12/TPM2_CH1
PTC0/ADC0_SE14/TSI0_CH13/EXTRG_IN/CMP0_OUT
PTC1/LLWU_P6/RTC_CLKIN/I2C1_SCL/TPM0_CH0
PTC2/ADC0_SE11/TSI0_CH15/I2C1_SDA/TPM0_CH1
PTC3/LLWU_P7/UART1_RX/TPM0_CH2/CLKOUT
PTC4/LLWU_P8/SPI0_PCS0/UART1_TX/TPM0_CH3
PTC5/LLWU_P9/SPI0_SCK/LPTMR0_ALT2/CMP0_OUT
PTC6/LLWU_P10/CMP0_IN0/SPI0_MOSI/EXTRG_IN
PTC7/CMP0_IN1/SPI0_MISO
PTC8/CMP0_IN2/I2C0_SCL/TPM0_CH4
PTC9/CMP0_IN3/I2C0_SDA/TPM0_CH5
PTC10/I2C1_SCL
PTC11/I2C1_SDA
PTD0/SPI0_PCS0/TPM0_CH0
PTD1/ADC0_SE5b/SPI0_SCK/TPM0_CH1
PTD2/SPI0_MOSI/UART2_RX/TPM0_CH2
PTD3/SPI0_MISO/UART2_TX/TPM0_CH3
PTD4/LLWU_P14/SPI1_PCS0/UART2_RX/TPM0_CH4
PTD5/ADC0_SE6b/SPI1_SCK/UART2_TX/TPM0_CH5
PTD6/LLWU_P15/ADC0_SE7b/SPI1_MOSI/UART0_RX
PTD7/SPI1_MISO/UART0_TX
PTE0/UART1_TX/RTC_CLKOUT/CMP0_OUT/I2C1_SDA
PTE1/SPI1_MOSI/UART1_RX/SPI1_MISO/I2C1_SCL
PTE20/ADC0_DP0/ADC0_SE0/TPM1_CH0/UART0_TX
PTE21/ADC0_DM0/ADC0_SE4a/TPM1_CH1/UART0_RX
PTE22/ADC0_DP3/ADC0_SE3/TPM2_CH0/UART2_TX
PTE23/ADC0_DM3/ADC0_SE7a/TPM2_CH1/UART2_RX
PTE24/TPM0_CH0/I2C0_SCL
PTE25/TPM0_CH1/I2C0_SDA
PTE29/CMP0_IN5/ADC0_SE4b/TPM0_CH2/TPM_CLKIN0
PTE30/DAC0_OUT/ADC0_SE23/CMP0_IN4/TPM0_CH3/TPM_CLKIN1
PTE31/TPM0_CH4
VREGIN
VOUT33
VREFH
VREFL
USB0_DM
USB0_DP
RESET_b/PTA20
VDD
VDDA
VSS
VSSA
MCU33V
USB3.3V
USB_D-
USB_D+
RESET
D1
BAT54C
POWER
PWR
R17
1K
R2
10K
C8
0.1uF
S1
RESET
C9
2.2uF
C5
0.1uF
C11
0.01uF
L1
151
L2
151
C10
2.2uF
C7
0.1uF
C13
0.01uF
C6
0.1uF
C12
0.01uF
L3
151
L4
151
R1
10K
U2
CP2101/2
CP2102
RST
SUSPEND
SUSPEND
RI
DCD
DTR
DSR
TXD
RXD
RTS
CTS
REGIN
VDD
GND
GND
VBUS
D+
D-
R7
1K
R8
1K
PTA1_UART0_RX
PTA2_UART0_TX
C1
2.2uF
C2
2.2uF
J1
USB_MINI_AB
VBUS
D-
D+
ID
GND
SHELL
C16
0.01uF
J2
USB_MINI_AB
USB_D-
USB_D+
PTC8_USBID_DC
R9
R10
R11
C14
0.01uF
D3
USB TYPE-A RECAP.
C15
2.2uF
D2
GSOT05C-GS08/NC
R3
10K
R6
10K
U3
SP2526A-1
CTLA
FLAGA
FLAGB
CTLB
OUTA
IN
GND
OUTB
PTC2_USB_P_EN
PTE31_FLAGA
R4
10K
R5
10K
PTA4_KEY
PTC3_KEY
S2
KEY
S3
KEY
D3
RGB-LED
R12
220
R13
220
R14
220
PTA5_RED
PTA12_GREEN
PTA13_BLUE
JP3
JTAG
PTA3_SWD_DIO
PTA0_SWD_CLK
R15
10K
R16
10K
R19
SMD
EVM3ESX50B14
R18
220
PTE29_ADC
Title
Size
B
Number
Revision
Date: 16-Jul-2013
Sheet of
File: E:\Mywork\ARM\Freescale\MKL25Z128VLH4\Schematic\MKL25Z128VLH4.ddb