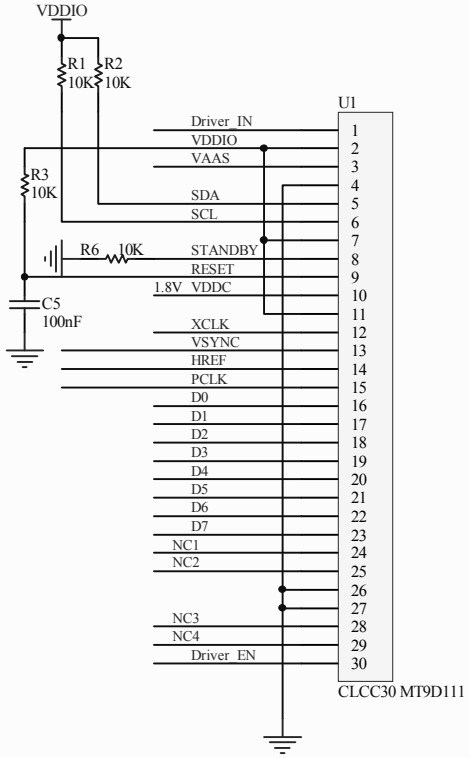

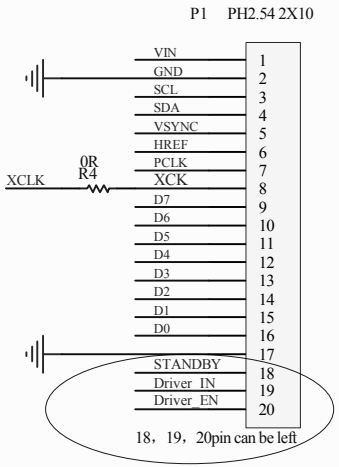

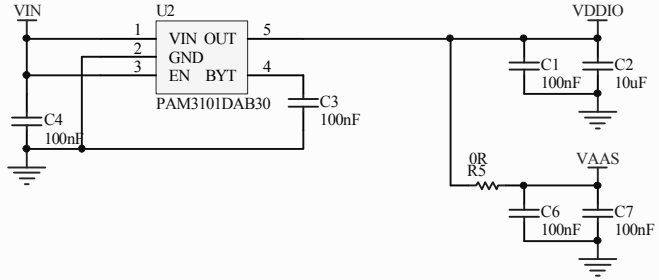

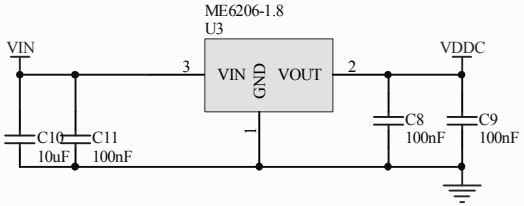

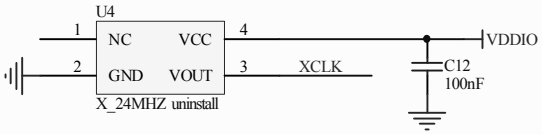

Title	Mt9d111	
Size A4	Number 1	Revision REV2.0
Date: 2011-11-29		Sheet of 1
File: D:\Mt9d111.SchDoc		Drawn By: